www.sealing-bts.ru
e-mail: btsoffice2016@gmail.com

R-BT-FN

Equivalent to BT-FN

R-BT-FN.NU

DIN24960(EN12756)

Temperature: -20°C~180°C
Pressure: ≤1.4 мПа
Velocity: ≤15 m/s

Температура: -20°C~180°C
Давление: ≤1.4 мПа
Скорость: ≤15 м/сек

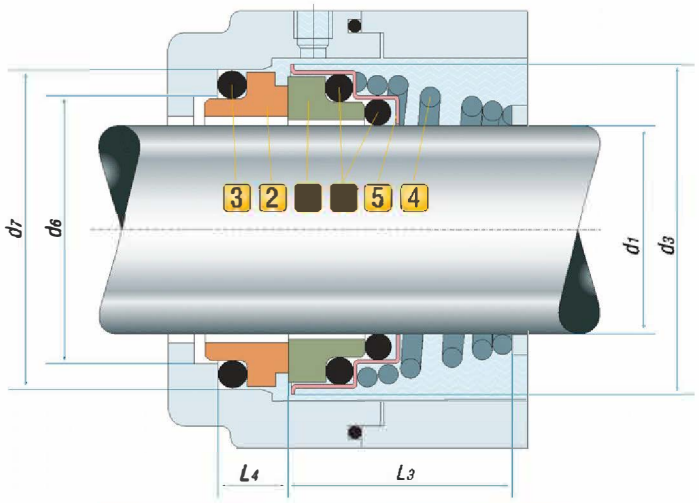

COMBINED MATERIALS

1. Rotary Face: Ceramic/SIC
2. Stationary Seat: Carbon/SIC
3. Flexible Member: NBR/VITON/EPDM
4. Spring: Stainless Steel(Right:R;Left:L)
5. Metal Parts: Stainless Steel

Материалы

1. Вращающееся кольцо: Ceramic/SIC
2. Неподвижное кольцо: Carbon/SIC
3. Сильфон: NBR/EPDM/VITON.
4. Пружина: Правая (R) / Левая (L).
5. Металлические части: SS304/SS316.

R-BT-FN

	d_1 (h6)	d_3 (Max)	d_6	d_7 (H8)	L_3 (±0.5)	L_4
R-BT-FN-10	10	20	14.0	18.1	15	5.5
R-BT-FN-11	11	22	16.5	20.6	18	5.5
R-BT-FN-12	12	22	16.5	20.6	18	5.5
R-BT-FN-13	13	25	18.5	23.1	22	6.0
R-BT-FN-14	14	25	18.5	23.1	22	6.0
R-BT-FN-15	15	29	21.5	26.9	23	7.0
R-BT-FN-16	16	29	21.5	26.9	23	7.0
R-BT-FN-17	17	29	21.5	26.9	23	7.0
R-BT-FN-18	18	33	24.5	30.9	24	8.0
R-BT-FN-19	19	33	26.0	30.9	25	8.0
R-BT-FN-20	20	33	26.0	30.9	25	8.0
R-BT-FN-21	21	38	29.0	35.4	25	8.0
R-BT-FN-22	22	38	29.0	35.4	25	8.0
R-BT-FN-23	23	38	29.0	35.4	27	8.0
R-BT-FN-24	24	38	29.0	35.4	27	8.0
R-BT-FN-25	25	40	31.5	38.2	27	8.5
R-BT-FN-28	28	46	37.5	43.3	30	9.0
R-BT-FN-29	29	46	37.5	43.3	30	9.0
R-BT-FN-30	30	46	37.5	43.3	30	9.0
R-BT-FN-32	32	46	37.5	43.3	30	9.0
R-BT-FN-33	33	48	45.0	53.5	39	11.5
R-BT-FN-35	35	50	45.0	53.5	39	11.5
R-BT-FN-38	38	58	52.0	60.5	39	11.5
R-BT-FN-40	40	58	52.0	60.5	39	11.5

R-BT-FN.NU

	d_1 (h6)	d_3 (Max)	d_6	d_7 (H8)	L_3 (±0.5)	L_4
R-BT-FN.NU-10	10	20	17	21	15	7
R-BT-FN.NU-12	12	22	19	23	18	7
R-BT-FN.NU-14	14	25	21	25	22	7
R-BT-FN.NU-16	16	29	23	27	23	7
R-BT-FN.NU-18	18	33	27	33	24	10
R-BT-FN.NU-20	20	33	29	35	25	10
R-BT-FN.NU-22	22	38	31	37	25	10
R-BT-FN.NU-24	24	38	33	39	27	10
R-BT-FN.NU-25	25	40	34	40	27	10
R-BT-FN.NU-28	28	46	37	43	29	10
R-BT-FN.NU-30	30	46	39	45	30	10
R-BT-FN.NU-32	32	46	42	48	30	10
R-BT-FN.NU-33	33	48	42	48	39	10
R-BT-FN.NU-35	35	50	44	50	39	10
R-BT-FN.NU-38	38	58	49	56	42	13
R-BT-FN.NU-40	40	58	51	58	42	13